PROFESSIONAL RTS GAMING MONITOR

Gaming is in the Details

RL2450H / RL2450HT

User Manual

Download from Www.Somanuals.com. All Manuals Search And Download.

Copyright

Copyright © 2012 by BenQ Corporation. All rights reserved. No part of this publication may be reproduced, transmitted, transcribed, stored in a retrieval system or translated into any language or computer language, in any form or by any means, electronic, mechanical, magnetic, optical, chemical, manual or otherwise, without the prior written permission of BenQ Corporation.

Disclaimer

BenQ Corporation makes no representations or warranties, either expressed or implied, with respect to the contents hereof and specifically disclaims any warranties, merchantability or fitness for any particular purpose. Further, BenQ Corporation reserves the right to revise this publication and to make changes from time to time in the contents hereof without obligation of BenQ Corporation to notify any person of such revision or changes.

Power Safety

Please follow these safety instructions for best performance, and long life for your monitor.

- The AC plug isolates this equipment from the AC supply.
- The power supply cord serves as a power disconnect device for pluggable equipment. The socket outlet should be installed near the equipment and be easily accessible.
- This product should be operated from the type of power indicated on the marked label. If you are not sure of the type of power available, consult your dealer or local power company.
- An approved power cord greater or equal to H03VV-F or H05VV-F, 2G or 3G, 0.75mm2 must be used.

Care And Cleaning

- Cleaning. Always unplug your monitor from the wall outlet before cleaning. Clean the LCD monitor surface with a lint-free, non-abrasive cloth. Avoid using any liquid, aerosol or glass cleaners.
- Slots and openings on the back or top of the cabinet are for ventilation. They must not be blocked or covered. Your monitor should never be placed near or over a radiator or heat source, or in a built-in installation unless proper ventilation is provided.
- Never push objects or spill liquid of any kind into this product.

Servicing

Do not attempt to service this product yourself, as opening or removing covers may expose you to dangerous voltages or other risks. If any of the above mentioned misuse or other accident such as dropping or mishandling occurs, contact qualified service personnel for servicing.

Download from Www.Somanuals.com. All Manuals Search And Download.

BenQ ecoFACTS

BenQ has been dedicated to the design and development of greener product as part of its aspiration to realize the ideal of the "Bringing Enjoyment 'N Quality to Life" corporate vision with the ultimate goal to achieve a low-carbon society. Besides meeting international regulatory requirement and standards pertaining to environmental management, BenQ has spared no efforts in pushing our initiatives further to incorporate life cycle design in the aspects of material selection, manufacturing, packaging, transportation, using and disposal of the products. BenQ ecoFACTS label lists key eco-friendly design highlights of each product, hoping to ensure that consumers make informed green choices at purchase. Check out BenQ's CSR Website at http://csr.BenQ.com/ for more details on BenQ's environmental commitments and achievements.

Download from Www.Somanuals.com. All Manuals Search And Download.

Table of Contents

Copyright 2

Getting started 5

Getting to know your monitor 7

Front view 7

Back view 7

How to assemble your monitor hardware (RL2450H) 8

How to detach the stand base 12

Using the monitor wall mounting kit 13

Assembling your monitor with a height adjustment stand (RL2450HT) 14

How to attach the monitor base 14

How to detach the base 16

Adjusting the monitor height 17

Rotating the monitor 18

Viewing angle adjustment 19

Using the monitor wall mounting kit 20

Getting the most from your BenQ monitor 21

How to install the monitor on a new computer 22

How to upgrade the monitor on an existing computer 23

How to install on Windows 7 system 24

How to install on Windows Vista systems 25

How to adjust your monitor 26

The control panel 26

Basic menu operation 27

Picture optimization 29

Customizing the hot keys 29

Setting up your own game mode 29

Adjusting display mode 30

Using Smart Scaling 30

Navigating the main menu 31

Display menu 32

Picture menu 34

Picture Advanced menu 36

Save Settings menu 39

Audio menu 40

System menu 41

Troubleshooting 44

Frequently asked questions (FAQ) 44

Need more help? 45

Download from Www.Somanuals.com. All Manuals Search And Download.

Getting started

When unpacking please check you have the following items. If any are missing or damaged, please contact the place of purchase for a replacement.

BenQ LCD Monitor	RL2450H RL2450HT 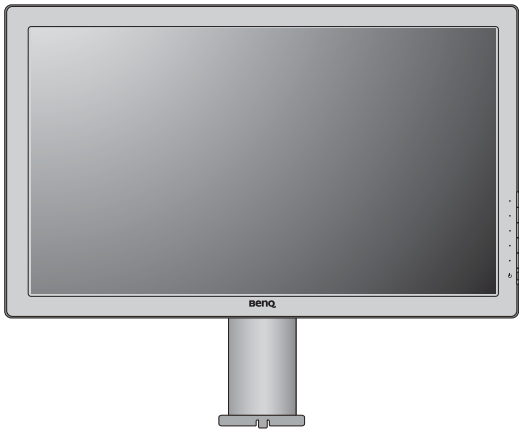
Monitor Stand (for RL2450H)	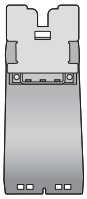
Monitor Base (for RL2450H)	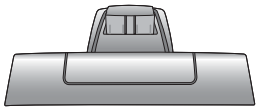
Monitor Base (for RL2450HT)	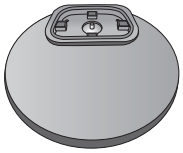
Quick Start Guide	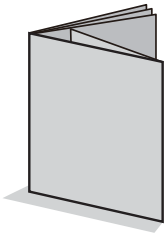

Download from Www.Somanuals.com. All Manuals Search And Download.

CD-ROM	
Power Cord (Picture may differ from product supplied for your region.)	
Video Cable: D-Sub	
Video Cable: DVI-D	
Video Cable: HDMI (Optional accessory)	

Consider keeping the box and packaging in storage for use in the future when you may need to transport the monitor. The fitted foam packing is ideal for protecting the monitor during transport.

Always keep the product and accessories out of reach of small children.

Download from Www.Somanuals.com. All Manuals Search And Download.

Getting to know your monitor

Front view

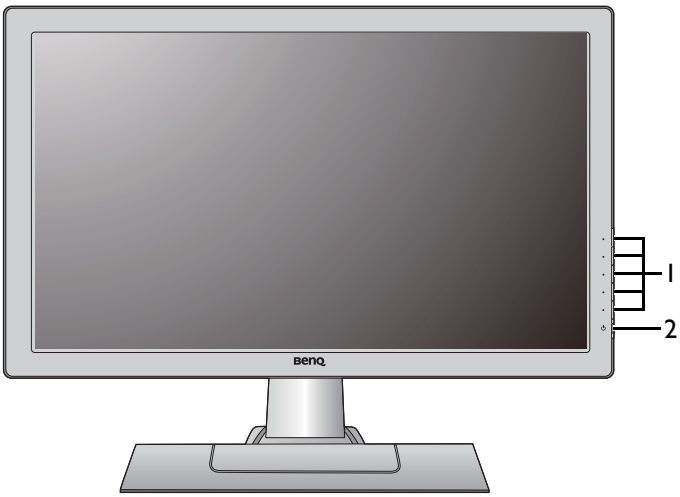

1. Control buttons
2. Power button

Back view

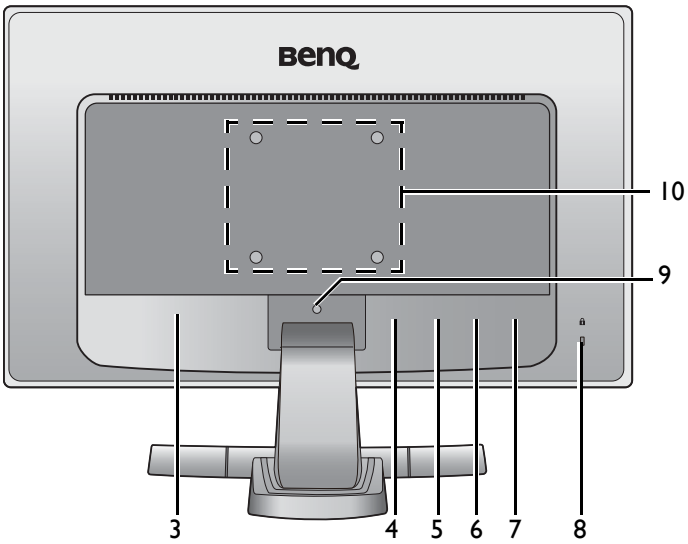

3. AC Power Input jack
4. Headphone jack
5. HDMI socket
6. DVI-D socket
7. D-Sub socket
8. Kensington lock slot
9. Release button
10. Wall mount holes

- Above diagram may vary depending on the model.
- Picture may differ from the product supplied for your region.

Download from Www.Somanuals.com. All Manuals Search And Download.

How to assemble your monitor hardware (RL2450H)

- If your model came with a height adjustment stand (HAS), refer to Assembling your monitor with a height adjustment stand (RL2450HT) on page 14 for details on hardware installation.
- If the computer is turned on you must turn it off before continuing.
  Do not plug-in or turn-on the power to the monitor until instructed to do so.

1. Attach the monitor base.

Please be careful to prevent damage to the monitor. Placing the screen surface on an object like a stapler or a mouse will crack the glass or damage the LCD substrate voiding your warranty. Sliding or scraping the monitor around on your desk will scratch or damage the monitor surround and controls.

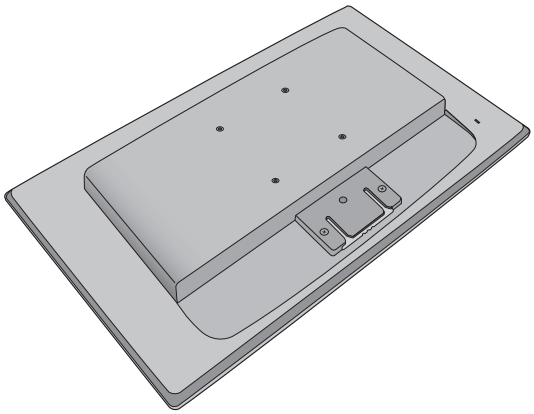

Protect the monitor and screen by clearing a flat open area on your desk and placing a soft item like the monitor packaging bag on the desk for padding.

Gently lay the screen face down on a flat clean padded surface.

Attach the monitor stand to the monitor base as illustrated until it locks in place.

Gently attempt to pull them back apart to check that they have properly engaged.

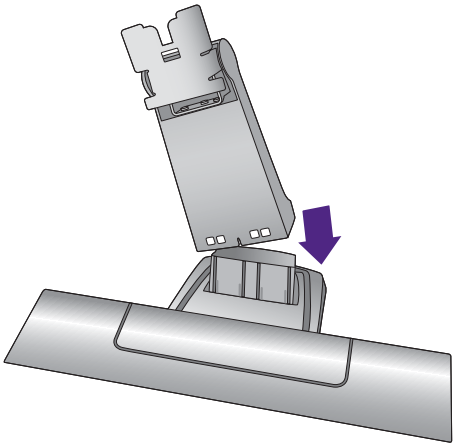

Orient and align the stand arm with the monitor, then push them together until they click and lock into place.

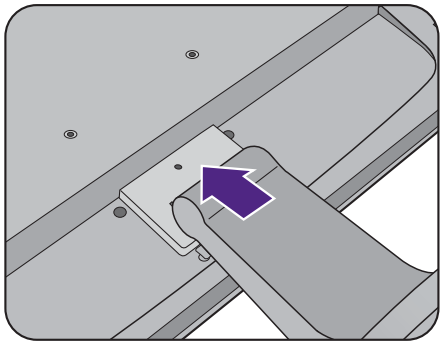

Download from Www.Somanuals.com. All Manuals Search And Download.

Gently attempt to pull them back apart to check that they have properly engaged.

Carefully lift the monitor, turn it over and place it upright on its stand on a flat even surface.

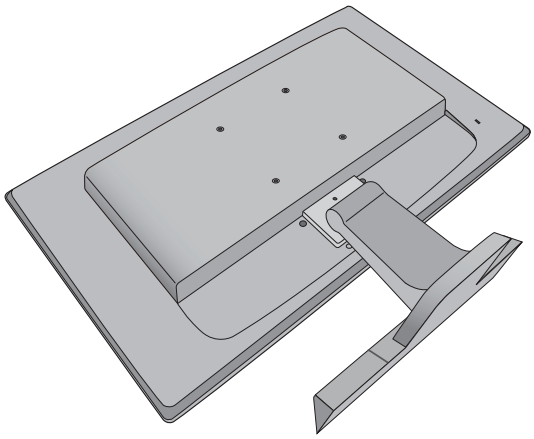

You should position the monitor and angle the screen to minimize unwanted reflections from other light sources.

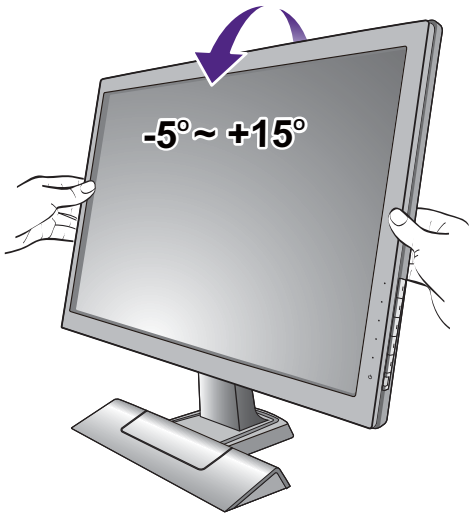

2. Connect the PC video cable

Do not use both DVI-D cable and D-Sub cable on the same PC. The only case in which both cables can be used is if they are connected to two different PCs with appropriate video systems.

<u>To Connect the D-Sub Cable</u>

Connect the plug of the D-Sub cable (at the end without the ferrite filter) to the monitor video socket. Connect the other end of the cable (at the end with the ferrite filter) to the computer video socket.

Tighten all finger screws to prevent the plugs from accidently falling out during use.

Either

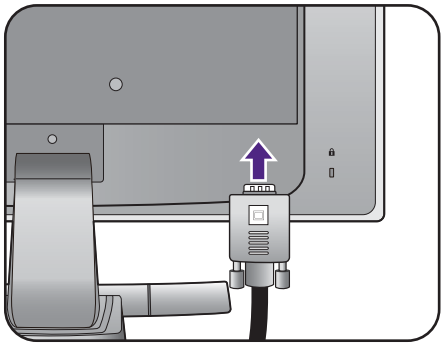

Download from Www.Somanuals.com. All Manuals Search And Download.

To Connect the DVI-D Cable

Connect the plug of the DVI-D cable (at the end without the ferrite filter) to the monitor video socket. Connect the other end of the cable (at the end with the ferrite filter) to the computer video socket.

Tighten all finger screws to prevent the plugs from accidently falling out during use.

Or

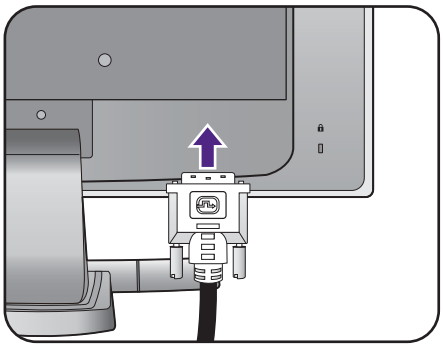

To Connect the HDMI Cable

Connect the plug of the HDMI cable to the HDMI port on the monitor. Connect the other end of the cable to the HDMI port of a digital output device.

Or

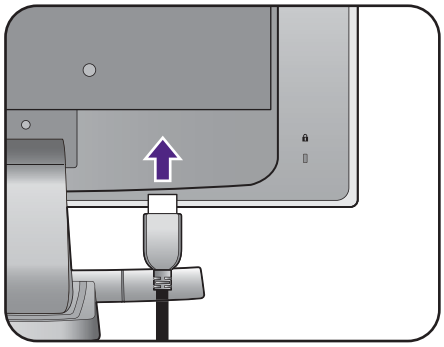

If there is more than one video transmission method available to you, you might want to take the picture quality of each video cable into consideration before making the connection.
- Better quality: HDMI / DVI-D
- Good quality: D-Sub

The video cables included in your package and the socket illustrations on the right may vary depending on the product supplied for your region.

3. Connect the headphones.

You may connect headphones to the headphone jack found on the back side of the monitor.

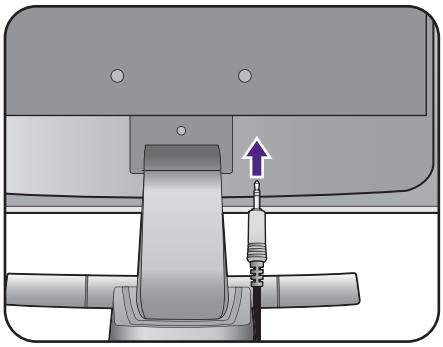

4. Connect the power cable to the monitor.

Plug one end of the power cord into the socket labelled ~ on the rear of the monitor. Do not connect the other end to a power outlet just yet.

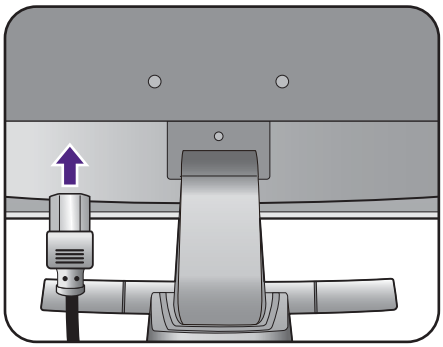

Download from Www.Somanuals.com. All Manuals Search And Download.

5. Connect-to and turn-on the power.

Plug the other end of the power cord into a power outlet and turn it on.

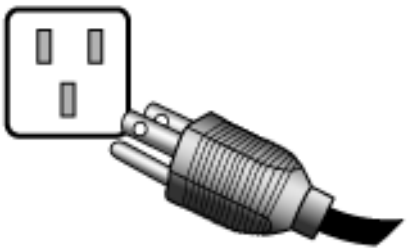

Picture may differ from product supplied for your region.

Turn on the monitor by pressing the power button on the monitor.

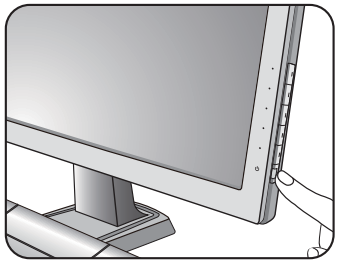

Turn on the computer too, and follow the instructions in Getting the most from your BenQ monitor on page 21 to install the monitor software.

To extend the service life of the product, we recommend that you use your computer's power management function.

Download from Www.Somanuals.com. All Manuals Search And Download.

How to detach the stand base

1. Prepare the monitor and area.

Turn off the monitor and the power before unplugging the power cable. Turn off the computer before unplugging the monitor signal cable.

Protect the monitor and screen by clearing a flat open area on your desk and placing a soft item like a towel on the desk for padding, before laying the screen face down on a flat clean padded surface.

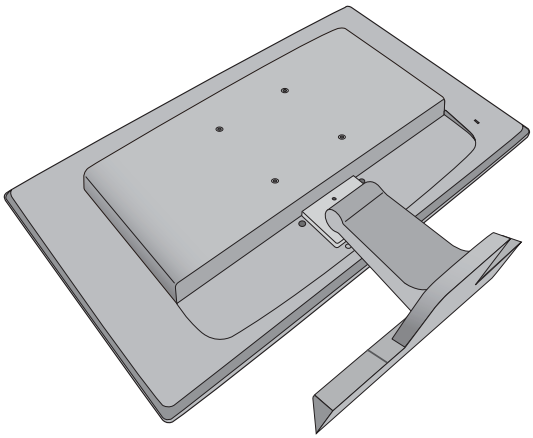

Please be careful to prevent damage to the monitor. Placing the screen surface on an object like a stapler or a mouse will crack the glass or damage the LCD substrate voiding your warranty. Sliding or scraping the monitor around on your desk will scratch or damage the monitor surround and controls.

2. Push the locking clips upward to detach the monitor base from the monitor stand arm.

While pushing the locking clips upward, detach the stand base from the stand arm.

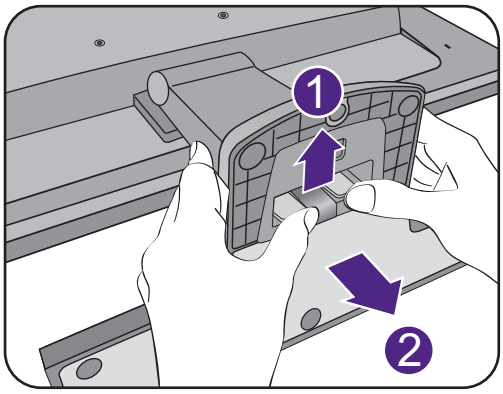

3. Remove the monitor stand.

Insert a pointed object such as a screwdriver to the hole above the monitor stand arm, and then push the screwdriver against the release button inside the hole. Then pull the monitor stand backward away from the monitor.

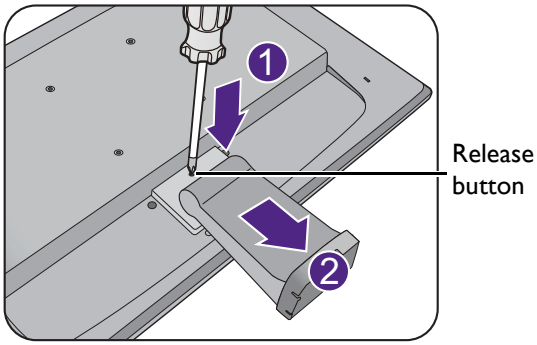

Download from Www.Somanuals.com. All Manuals Search And Download.

Using the monitor wall mounting kit

The back of your LCD monitor has a VESA standard mount with 100mm pattern, allowing the installation of a wall mount bracket. Before starting to install a monitor wall mounting kit, please read the precautions carefully.

Precautions

- Install your monitor and monitor mounting kit on a wall with flat surface.
- Ensure that the wall material is stable to support the weight of the monitor.
- Turn off the monitor and the power before disconnecting the cables from the LCD monitor.

1. Remove the monitor stand.

Lay the screen face down on a clean and well-padded surface.

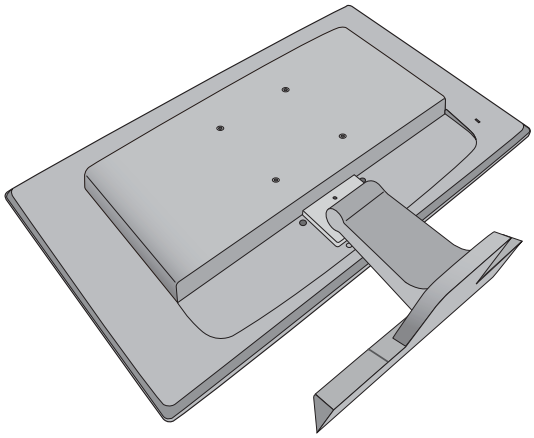

Detach the monitor base as instructed in How to detach the stand base on page 12.

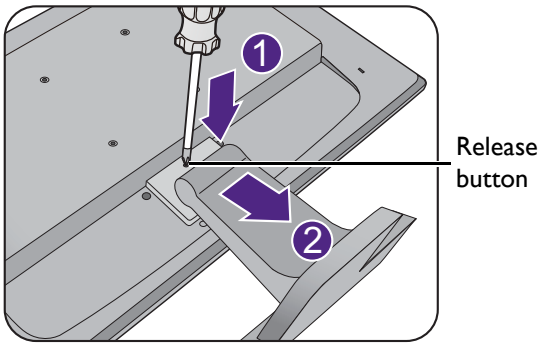

2. Follow the instruction manuals of the wall mount bracket you purchased to complete the installation.

Download from Www.Somanuals.com. All Manuals Search And Download.

Assembling your monitor with a height adjustment stand (RL2450HT)

How to attach the monitor base

- If the computer is turned on you must turn it off before continuing.
  Do not plug-in or turn-on the power to the monitor until instructed to do so.
- The following illustrations are for your reference only. Available input and output jacks may vary depending on the purchased model.

Please be careful to prevent damage to the monitor. Placing the screen surface on an object like a stapler or a mouse will crack the glass or damage the LCD substrate voiding your warranty. Sliding or scraping the monitor around on your desk will scratch or damage the monitor surround and controls.

Protect the monitor and screen by clearing a flat open area on your desk and placing a soft item like the monitor packaging bag on the desk for padding.

Gently lay the screen face down on a flat clean padded surface.

While holding the monitor firmly against the desk, pull the monitor stand arm upwards clear of the monitor.

Orient and align the stand base socket with the end of the stand arm, then push them together. Tighten the thumbscrew on the bottom of the monitor base as illustrated.

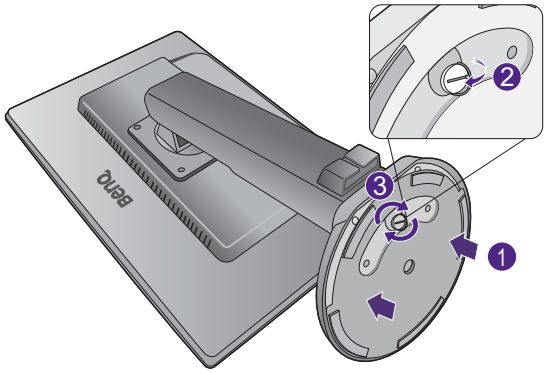

Gently attempt to pull them back apart to check that they have properly engaged.

Carefully lift the monitor, turn it over and place it upright on its stand on a flat even surface.

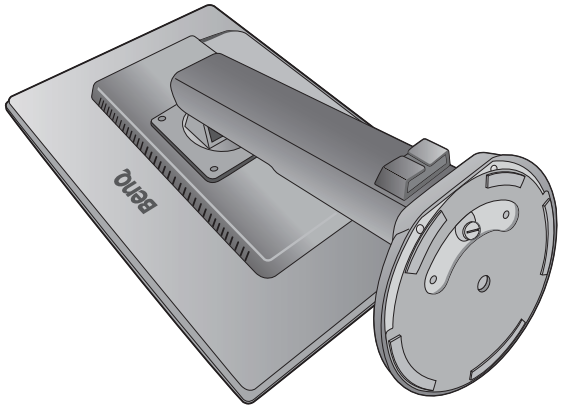

Download from Www.Somanuals.com. All Manuals Search And Download.

Extend the monitor to the maximum extended position. Then tilt the monitor. And rotate the monitor 90 degrees counterclockwise as illustrated.

You might want to adjust the monitor stand height. See Adjusting the monitor height on page 17 for more information.

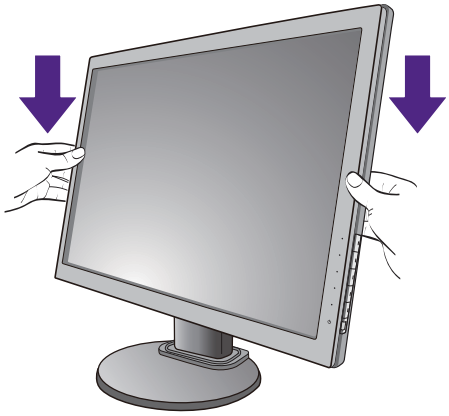

You should position the monitor and angle the screen to minimize unwanted reflections from other light sources.

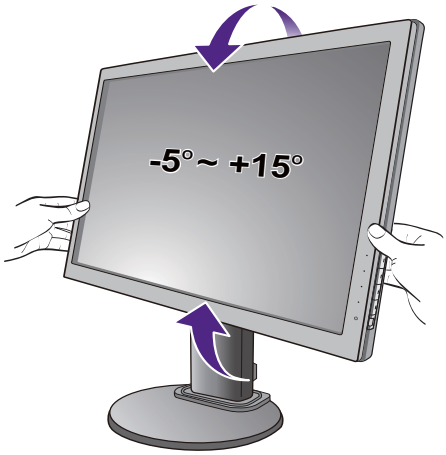

Download from Www.Somanuals.com. All Manuals Search And Download.

How to detach the base

To move the monitor properly, you should extend the monitor to its maximum height, then place one hand on the upper part of the monitor stand and the other hand on the lower part of the stand as illustrated.

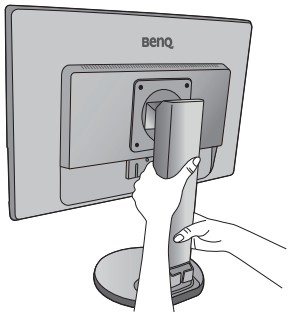

1. Prepare the monitor and area.

Turn off the monitor and the power before unplugging the power cable. Turn off the computer before unplugging the monitor signal cable.

Gently lift the display up and extend the stand to the maximum extended position.

Protect the monitor and screen by clearing a flat open area on your desk and placing a soft item like a towel on the desk for padding, before laying the screen face down on a flat clean padded surface.

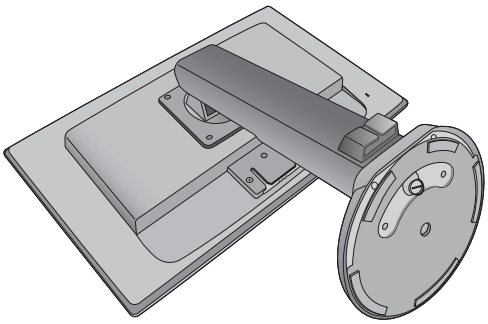

Please be careful to prevent damage to the monitor. Placing the screen surface on an object like a stapler or a mouse will crack the glass or damage the LCD substrate voiding your warranty. Sliding or scraping the monitor around on your desk will scratch or damage the monitor surround and controls.

2. Release the thumbscrew on the bottom of the monitor base and detach the monitor base as illustrated.

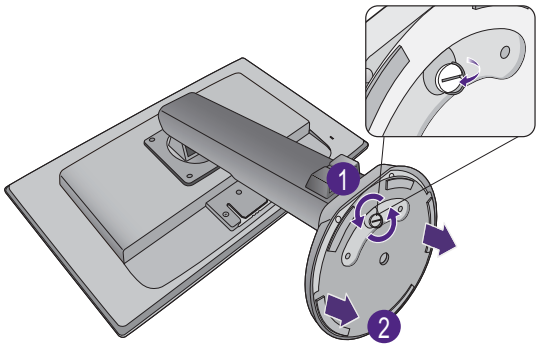

Download from Www.Somanuals.com. All Manuals Search And Download.

Adjusting the monitor height

To adjust the monitor height, hold both the left and the right sides of the monitor to lower the monitor or lift it up to the desired height.

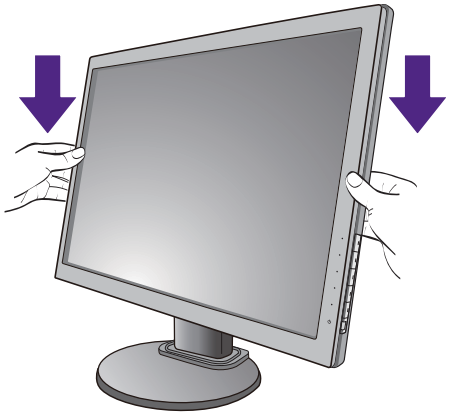

- Avoid placing hands on the upper or lower part of the height-adjustable stand or at the bottom of the monitor, as ascending or descending monitor might cause personal injuries. Keep children out of reach of the monitor while performing this operation.

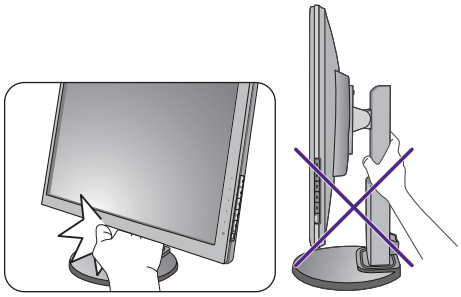

- If the monitor has been rotated to portrait mode and height adjustment is desired, you should be noted that the wide screen will keep the monitor from being lowered to its minimum height.

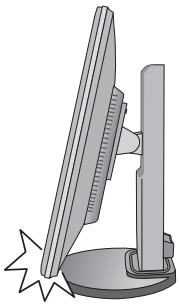

Download from Www.Somanuals.com. All Manuals Search And Download.

Rotating the monitor

1. Pivot the display.

Before rotating the monitor with a portrait viewing orientation, the display has to be rotated 90 degrees.

Right-click the desktop and select **Screen resolution** from the popup menu. Select **Portrait** in **Orientation**, and apply the setting.

Depending on the operation system on your PC, different procedures should be followed to adjust the screen orientation. Refer to the help document of your operation system for details.

2. Fully extend the monitor and tilt it.

Gently lift the display up and extend it to the maximum extended position. Then tilt the monitor.

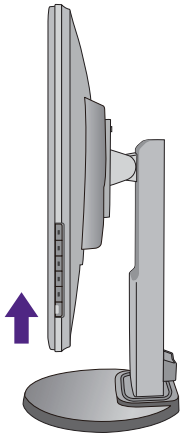

The monitor should be vertically extended to allow to rotate from landscape to portrait mode.

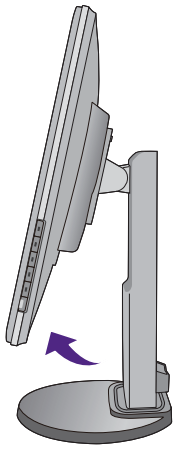

3. Rotate the monitor 90 degrees clockwise as illustrated.

To avoid the edge of the LCD display hitting the monitor base surface while it is being rotated, do tilt and extend the monitor to the highest position before you start to rotate the display.
You should also make sure there are no obstacles around the monitor and there is enough room for cables. You might need to route the cables again via the cable clip after the rotation.

Download from Www.Somanuals.com. All Manuals Search And Download.

4. Adjust the monitor to the desired viewing angle.

Viewing angle adjustment

You may position the screen to the desired angle with -5° to +15° monitor tilt, 90° (left and right total) monitor swivel, and 110 mm monitor height.

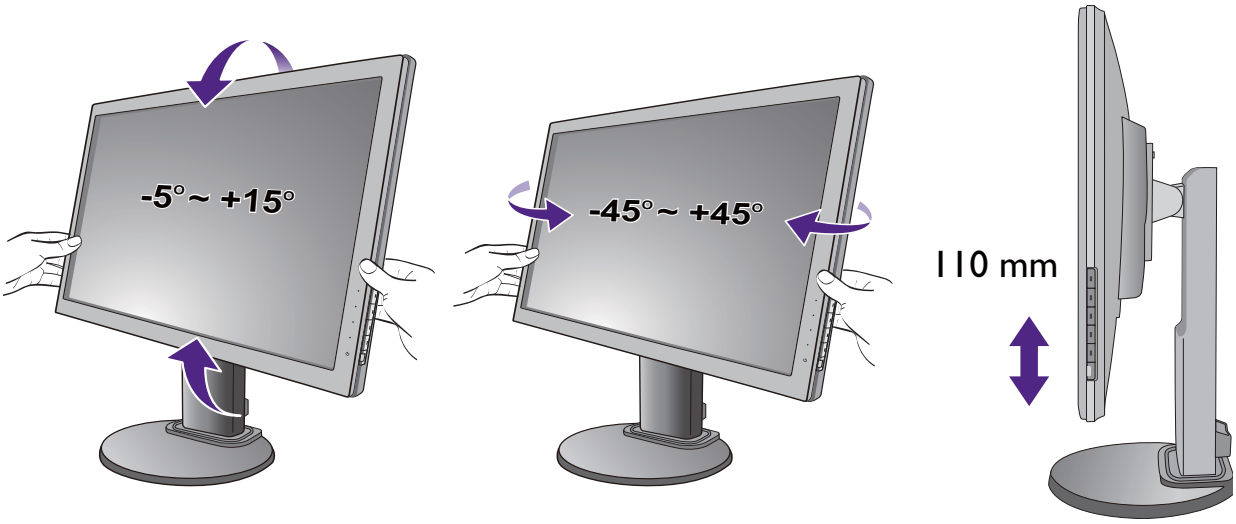

Download from Www.Somanuals.com. All Manuals Search And Download.

Using the monitor wall mounting kit

The back of your LCD monitor has a VESA standard mount with 100mm pattern, allowing the installation of a wall mount bracket. Before starting to install a monitor wall mounting kit, please read the precautions carefully.

Precautions:

- Install your monitor and monitor mounting kit on a wall with flat surface.
- Ensure that the wall material is stable to support the weight of the monitor.
- Turn off the monitor and the power before disconnecting the cables from the LCD monitor.

1. Remove the monitor stand.

Lay the screen face down on a clean and well-padded surface.

Use a a cross-pointed screwdriver to release the screws that fixing the monitor stand to the monitor.The use of a magnetic-head screwdriver is recommended to avoid of losing the screws.

Then pull the monitor stand backward away from the monitor.

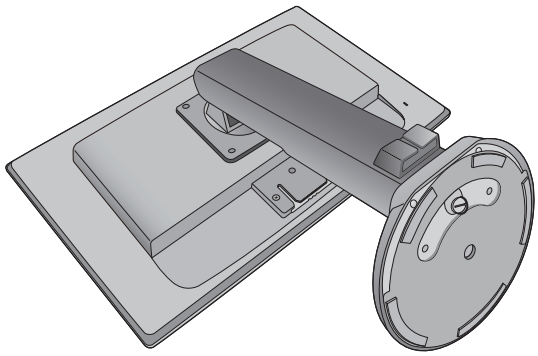

In case you intend to use your monitor on the stand in the future, please keep the monitor base, monitor stand, and screws somewhere safe for future use.

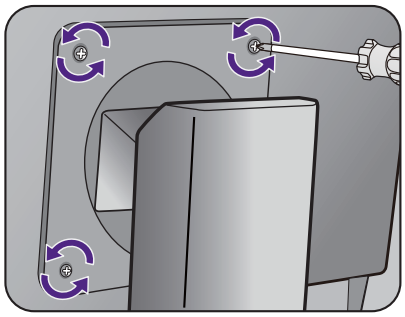

2. Follow the instruction manuals of the wall mount bracket you purchased to complete the installation.

Download from Www.Somanuals.com. All Manuals Search And Download.

Getting the most from your BenQ monitor

To gain the most benefit from your new BenQ LCD monitor, you should install the custom BenQ LCD Monitor driver software as provided on the BenQ LCD Monitor CD-ROM.

The circumstances under which you connect and install your BenQ LCD Monitor will determine which process you need to follow to successfully install the BenQ LCD Monitor driver software. These circumstances relate to which version of Microsoft Windows you are using, and whether you are connecting the monitor and installing the software onto a new computer (without existing monitor driver software), or whether you are upgrading an existing installation (which already has existing monitor driver software) with a newer monitor.

In either case however, the very next time you turn on your computer (after connecting the monitor to your computer), Windows will automatically recognize the new (or different) hardware, and will launch its **Found New Hardware wizard**.

Follow the wizard instructions until it asks you to select a monitor model. At that point, click the **Have Disk** button, insert the BenQ LCD Monitor CD-ROM and select the appropriate monitor model. Further details and step-by-step instructions for either an automatic (new) or upgrade (existing) installation, see:

- How to install the monitor on a new computer on page 22.
- How to upgrade the monitor on an existing computer on page 23.

- If you require a User Name and Password to login to your Windows computer, you must be logged on as an Administrator or as a member of the Administrators group in order to install the monitor driver software. Furthermore, if your computer is connected to a network which has security access requirements, network policy settings may prevent you from installing software on your computer.
- To check the name of the purchased model, refer to the specification label on the back of the monitor.

Download from Www.Somanuals.com. All Manuals Search And Download.

How to install the monitor on a new computer

This instruction details the procedure for selecting and installing the BenQ LCD Monitor driver software on a new computer which has never had a monitor driver installed before. This instruction is only suitable for a computer which has never been used before, and for which the BenQ LCD Monitor is the first ever monitor to be connected to it.

If you are adding the BenQ LCD Monitor to an existing computer that has already had another monitor connected to it (and has monitor driver software installed), you should not be following these instructions. You should instead be following the instructions for How to upgrade the monitor on an existing computer.

1. Follow the instructions in Getting the most from your BenQ monitor on page 21.
   When Windows starts, it will automatically detect the new monitor and launch the **Found New Hardware Wizard**. Follow the prompts until it displays the option to **Install Hardware Device Drivers**.
2. Insert the BenQ LCD Monitor CD-ROM into a CD drive on the computer.
3. Check **Search for a suitable driver for my device** option, and click **Next**.
4. Check the option for CD-ROM drives (uncheck all others) and click **Next**.
5. Look to confirm that the wizard has selected the correct name of your monitor and click **Next**.
6. Click **Finish**.
7. Restart the computer.

To find the suitable driver files for the purchased model, refer to the following table.

Driver files	Suitable models
RL2450H	RL2450H /RL2450HT

Download from Www.Somanuals.com. All Manuals Search And Download.

How to upgrade the monitor on an existing computer

This instruction details the procedure for manually updating the existing monitor driver software on your Microsoft Windows computer. It is currently tested as compatible for Windows Vista and Windows 7 Operating System (OS).

The BenQ LCD Monitor driver for your model may well function perfectly with other versions of Windows, however, as at the time of writing, BenQ has done no testing of this driver on other versions of Windows and cannot guarantee its operation on those systems.

Installing monitor driver software involves selecting an appropriate information file (.inf) on the BenQ LCD Monitor CD-ROM for the particular model monitor you have connected, and letting Windows install the corresponding driver files from the CD. You need only steer it in the right direction. Windows has an Upgrade Device Driver Wizard to automate the task and guide you through the file selection and installation process.

See:

- How to install on Windows 7 system on page 24.
- How to install on Windows Vista systems on page 25.

Download from Www.Somanuals.com. All Manuals Search And Download.

How to install on Windows 7 system

1. Open **Display Properties**.

   Go to **Start**, **Control Panel, Hardware and Sound, Devices and Printers** and right-click the name of your monitor from the menu.

   Alternatively, right-click the desktop and select **Personalize**, **Display**, **Devices and Printers**, and right-click the name of your monitor from the menu.

2. Select **Properties** from the menu.
3. Click the **Hardware** tab.
4. Click **Generic PnP Monitor**, and then the **Properties** button.
5. Click the **Driver** tab and the **Update Driver** button.
6. Insert the BenQ LCD Monitor CD-ROM into a CD drive on the computer.
7. In the **Update Driver Software** window, select the option **Browse my computer for driver software**.
8. Click **Browse** and navigate to the following directory: d:\BenQ_LCD\Driver\ (where d is the drive letter designator for the CD-ROM drive).

The drive letter for your CD drive may differ from the example above depending upon your system - it may be 'D:' or 'E:' or 'F:' etc.

9. Select the correct folder name of your monitor from provided driver list, and click **Next**.

   This will copy and install the appropriate monitor driver files to your computer.

10. Click **Close**.

    You may be prompted to restart your computer after the driver update is complete.

Download from Www.Somanuals.com. All Manuals Search And Download.

How to install on Windows Vista systems

1. Open **Display Settings**.

   Right-click the desktop and select **Personalize** from the popup menu.

   Select **Display Settings** from the **Personalize appearance and sounds** window.

   The **Display Settings** window will display.

2. Click the **Advanced Settings** button.

   The **Generic PnP Monitor Properties** window will display.

3. Click the **Monitor** tab and the **Properties** button.
4. Click **Continue** in the prompted **User Account Control** window.
5. Click the **Driver** tab and the **Update Driver** button.
6. Insert the BenQ LCD Monitor CD-ROM into a CD drive on the computer.
7. In the **Update Driver Software** window, select the option **Browse my computer for driver software**.
8. Click **Browse** and navigate to the following directory: d:\BenQ_LCD\Driver\ (where d is the drive letter designator for the CD-ROM drive).

The drive letter for your CD drive may differ from the example above depending upon your system – it may be 'D:' or 'E:' or 'F:' etc.

9. Select the correct folder name of your monitor from provided driver list, and click **Next**.

   This will copy and install the appropriate monitor driver files to your computer.

10. Click **Close**.

    You may be prompted to restart your computer after the driver update is complete.

Download from Www.Somanuals.com. All Manuals Search And Download.

How to adjust your monitor

The control panel

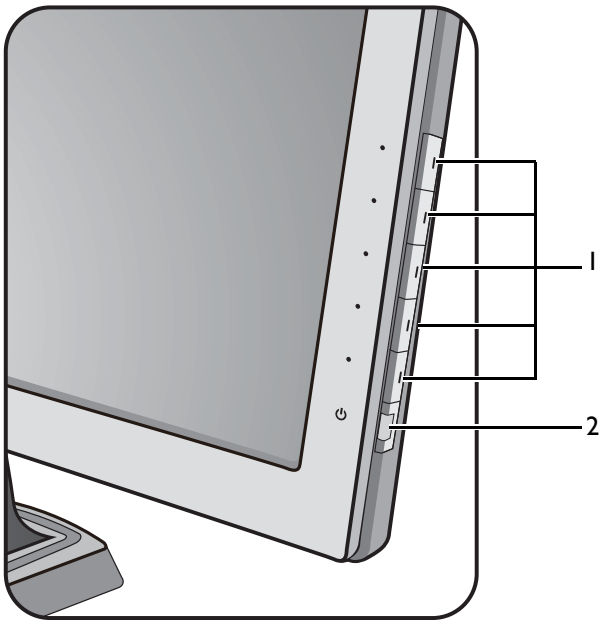

No.	Name	Description
1.	Control keys	Accesses the functions or menu items displayed on the screen, right next to each key.
2.	Power key	Turns the power on or off.

Download from Www.Somanuals.com. All Manuals Search And Download.

Basic menu operation

All OSD (On Screen Display) menus can be accessed by the control keys. You can use the OSD menu to adjust all the settings on your monitor.

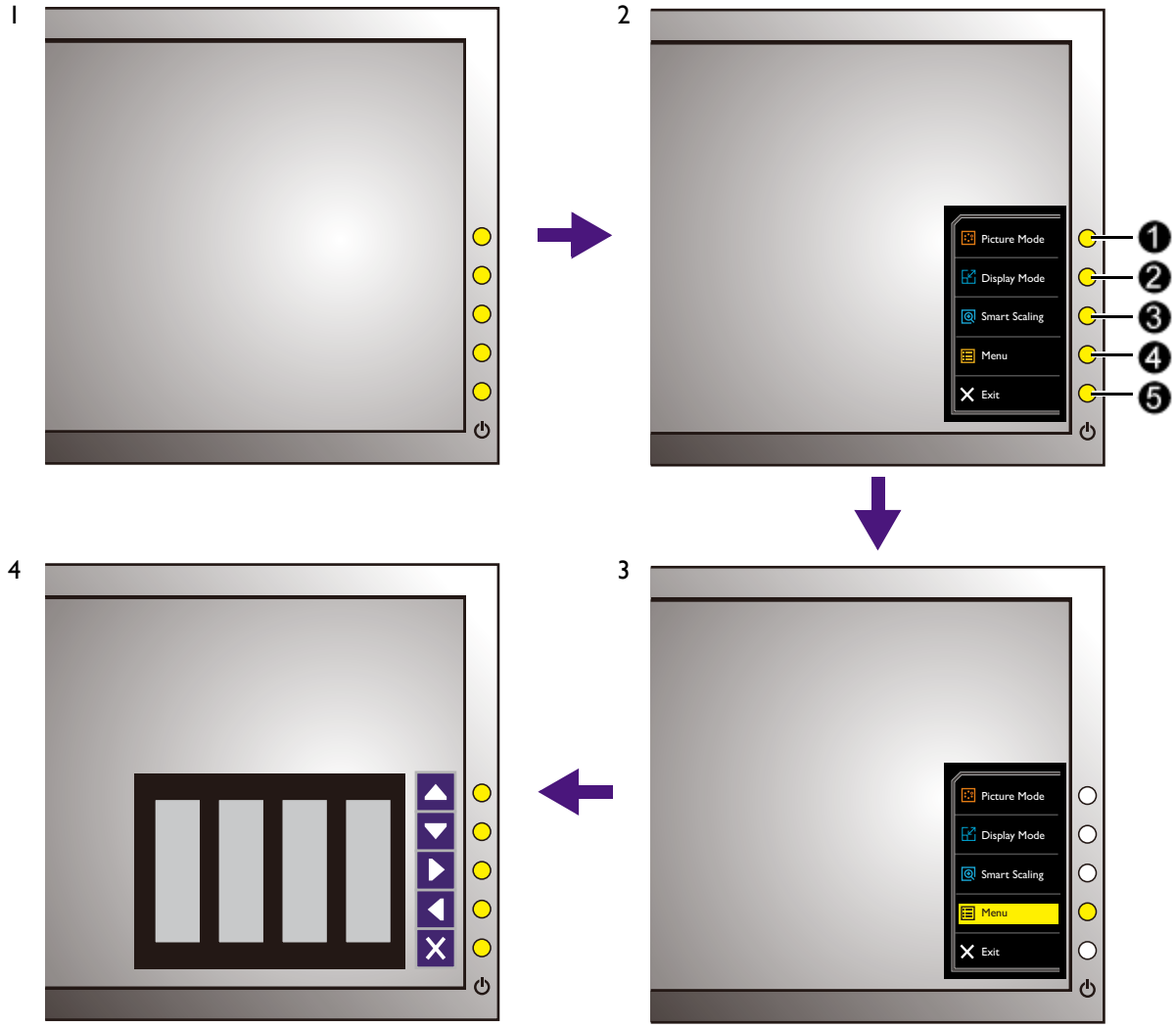

1. Press any of the control keys.
2. The hot key menu is displayed. The top three controls are custom keys and are designated for particular functions.
3. Select **Menu** to access the main menu.
4. In the main menu, follow the icons next to the control keys to make adjustments or selection. See Navigating the main menu on page 31 for details on the menu options.

No.	OSD in hot key menu	OSD icon in main menu	Function
❶	**Custom Key 1**	▲	• By default, the key is the hot key for **Picture Mode**. To change the default settings, see Customizing the hot keys on page 29. • For Up/Increase adjustment.

Download from Www.Somanuals.com. All Manuals Search And Download.

No.	OSD in hot key menu	OSD icon in main menu	Function
❷	**Custom Key 2**	▼	• By default, the key is the hot key for **Display Mode**. To change the default settings, see Customizing the hot keys on page 29. • For Down/Decrease adjustment.
❸	**Custom Key 3**	▶ / ✓	• By default, the key is the hot key for **Smart Scaling**. To change the default settings, see Customizing the hot keys on page 29. • Enters sub menus. • Selects menu items.
❹	MENU	◀	• Activates the main menu. • Returns to the previous menu.
❺	Exit	✕	Exits OSD menu.

- OSD = On Screen Display.
  The hot keys only operate while the main menu is not currently displaying. Hot key displays will disappear after a few seconds of no key activity.
- To unlock the OSD controls, press and hold any key for 10 seconds.

Download from Www.Somanuals.com. All Manuals Search And Download.

Picture optimization

The default picture mode is **RTS**, which is designed for RTS games. If you prefer other picture modes, go to **Picture Advanced** and change setting in **Picture Mode**.

The easiest way to obtain an optimal display from an analog (D-Sub) input is to use the **Auto Adjustment** function. Go to **Display** and **Auto Adjustment** to optimize the currently displayed image to the screen.

When you connect a digital video output using a digital (DVI or HDMI) cable to your monitor, the **Auto Adjustment** function will be disabled, because the monitor will automatically display the best image.

Please ensure that the connected graphic card on your computer is set to the native resolution of the monitor when you use the **Auto Adjustment** function.

If you wish, you can always adjust the screen geometric settings manually using geometry menu items. To assist you in this endeavour, BenQ has provided a screen test image utility which you can use to check for screen color, grayscale and line gradient display.

1. Run the test program auto.exe from CD-ROM. You could also use any other image, such as the desktop of your operating system. However, we recommend that you use auto.exe. As you run auto.exe, a test pattern displays.
2. Press any of the control keys to bring up the hot key menu. Select **Menu** to enter the main menu.
3. Go to **Display** and **Auto Adjustment**.
4. If you notice a vertical noise (like a curtain effect-shimmering of vertical lines), select **Pixel Clock** and adjust the monitor until the noise disappears.
5. If you notice a horizontal noise, select **Phase** and adjust the monitor until the noise disappears.

Customizing the hot keys

The top 3 control keys (also called custom keys) perform as hot keys to provide direct access to pre-defined functions. You can change the default setting and designate different functions for these keys.

1. Press any of the control keys to bring up the hot key menu, and press **Menu** to access the main menu.
2. Go to **System**.
3. Select the custom key you want to change.
4. In the sub menu, select a function that can be accessed by this key. A pop-up message will appear, showing that the setup is complete.

Setting up your own game mode

There are several preset picture modes on your monitor that are suitable for games. To better suit your needs, you can change and save the related display settings, and switch to your own game mode easily.

1. Adjust the related display settings in different OSD menus. Settings that can be customized for game mode are:
   - Brightness (see page 34)
   - Contrast (see page 34)

Download from Www.Somanuals.com. All Manuals Search And Download.

- Sharpness (see page 34)
- Black eQualizer (see page 34)
- Gamma (see page 35)
- Color Temperature (see page 35)
- Hue (see page 35)
- Saturation (see page 35)
- AMA (see page 35)
- Instant Mode (see page 35)
- Picture Mode (see page 36)
- Display Mode (see page 37)
- Dynamic Contrast (see page 37)
- Smart Scaling (see page 38)
- Smart Focus (see page 38)
- Volume (see page 40)
- Mute (see page 40)

2. After all settings are done, go to **Save Settings** and save as one of the game modes.
3. If you want to switch to your game mode at any time, go to **Picture Advanced** and **Picture Mode**, and select the game mode you saved in Step 2. Your preferred display settings will be applied all at once.

Adjusting display mode

To display images of aspect ratio other than 16:9 and size other than 24", you can adjust the display mode on the monitor.

1. Press any of the control keys to bring up the hot key menu, and press **Menu** to access the main menu.
2. Go to **Picture Advanced** and **Display Mode**.
3. Select an appropriate display mode. The setting will take effect immediately.

Switch to the desired display mode first, and follow the instructions in Using Smart Scaling on page 30 to adjust the display size to precisely suit your needs.

Using Smart Scaling

You can resize your display by **Smart Scaling**.

1. Go to **Picture Advanced** and **Smart Scaling**.
2. Adjust the value.

- If one of the custom keys is preset for **Smart Scaling**, you can press the custom key and adjust the value directly.
- Your display may become unstable temporarily when being resized. This is a normal phenomenon and should not be considered as manufacturing defect.
- For more information on **Smart Scaling**, go to Smart Scaling on page 38.

Download from Www.Somanuals.com. All Manuals Search And Download.

Navigating the main menu

You can use the OSD (On Screen Display) menu to adjust all the settings on your monitor. Press any of the control keys to bring up the hot key menu, and press **Menu** to access the main menu. See Basic menu operation on page 27 for details.

Available menu options may vary depending on the input sources, functions and settings. Menu options that are not available will become grayed out. And keys that are not available will be disabled and the corresponding OSD icons will disappear.

The OSD menu languages may differ from the product supplied to your region, see Language on page 42 under **System** and **OSD Settings** for more details.

For more information on each menu, please refer to the following pages:

- Display menu on page 32
- Picture menu on page 34
- Picture Advanced menu on page 36
- Save Settings menu on page 39
- Audio menu on page 40
- System menu on page 41

Download from Www.Somanuals.com. All Manuals Search And Download.

Display menu

Available menu options may vary depending on the input sources, functions and settings. Menu options that are not available will become grayed out. And keys that are not available will be disabled and the corresponding OSD icons will disappear.

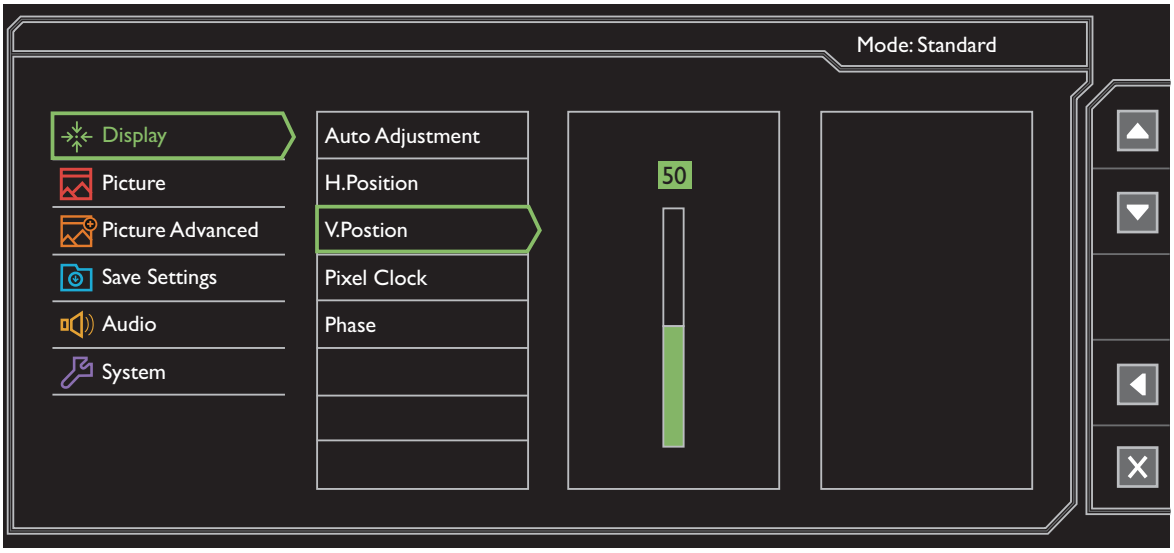

1. Select **Menu** from the hot key menu.
2. Use ▲ or ▼ to select **Display**.
3. Select ▶ to go to a sub menu, and then use ▲ or ▼ to select a menu item.
4. Use ▲ or ▼ to make adjustments, or use ✓ to make selection.
5. To return to the previous menu, select ◀.
6. To exit the menu, select ✕.

Item	Function	Range
Auto Adjustment	Optimizes and adjusts the screen settings automatically for you. Not applicable to a digital input signal.	
H. Position	Adjusts the horizontal position of the screen image.	0 to 100
V. Position	Adjusts the vertical position of the screen image.	0 to 100
Pixel Clock	Adjusts the pixel clock frequency timing to synchronize with the analog input video signal. See also: Picture optimization on page 29. Not applicable to a digital input signal.	0 to 100

Download from Www.Somanuals.com. All Manuals Search And Download.

Item	Function	Range
Phase	Adjusts the pixel clock phase timing to synchronize with the analog input video signal. See also: Picture optimization on page 29. Not applicable to a digital input signal.	0 to 63

Download from Www.Somanuals.com. All Manuals Search And Download.

Picture menu

Available menu options may vary depending on the input sources, functions and settings. Menu options that are not available will become grayed out. And keys that are not available will be disabled and the corresponding OSD icons will disappear.

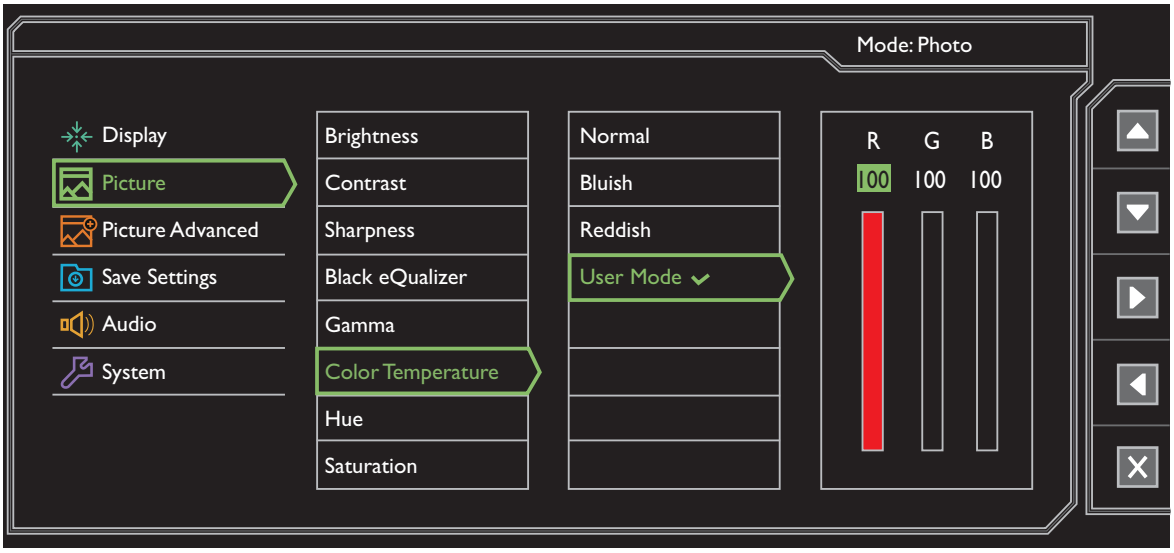

1. Select **Menu** from the hot key menu.
2. Use ▲ or ▼ to select **Picture**.
3. Select ▶ to go to a sub menu, and then use ▲ or ▼ to select a menu item.
4. Use ▲ or ▼ to make adjustments, or use ✓ to make selection.
5. To return to the previous menu, select ◀.
6. To exit the menu, select ✕.

Item	Function	Range
Brightness	Adjusts the balance between light and dark shades.	0 to 100
Contrast	Adjusts the degree of difference between darkness and lightness.	0 to 100
Sharpness	Adjusts the clarity and visibility of the edges of the subjects in the image.	1 to 10
Black eQualizer	Brings out the dark shades by increasing the brightness without changing those of the light shades. If the image is too bright or barely contains any dark shades, adjusting the value of **Black eQualizer** may not show much change to the image.	0 ~ 20

Download from Www.Somanuals.com. All Manuals Search And Download.

Item	Function		Range
Gamma	Adjusts the tone luminance. The default value is 3 (the standard value for Windows).		• **Gamma 1** • **Gamma 2** • **Gamma 3** • **Gamma 4** • **Gamma 5**
Color Temperature	**Normal**	Allows video and still photographs to be viewed with natural coloring. This is the factory default color.	
	Bluish	Applies a cool tint to the image and is factory pre-set to the PC industry standard white color.	
	Reddish	Applies a warm tint to the image and is factory pre-set to the news print standard white color.	
	User Mode	The blend of the Red, Green and Blue primary colors can be altered to change the color tint of the image. Go to the succeeding **R** (red), **G** (green), and **B** (blue) menus to change the settings. Decreasing one or more of the colors will reduce their respective influence on the color tint of the image. (e.g. if you reduce the Blue level the image will gradually take on a yellowish tint. If you reduce Green, the image will become a magenta tint.)	• **R** (0~100) • **G** (0~100) • **B** (0~100)
Hue	Adjusts the degree of how we perceive colors.		0 ~ 100
Saturation	Adjusts the purity degree of colors.		0 ~ 100
Reset Color	Resets the custom color settings to the factory defaults.		• **YES** • **NO**
AMA	Improves the gray level response time of the LCD panel.		• **ON** • **OFF**
Instant Mode	Adjusts the image processing to diminish input lag. You can have a real-time experience while playing games. To optimize the picture quality, disable **Instant Mode** if the source is interlaced video. To check the resolution of the video source, go to **System** and **Information** on the monitor.		• **ON** • **OFF**

Download from Www.Somanuals.com. All Manuals Search And Download.

Picture Advanced menu

Available menu options may vary depending on the input sources, functions and settings. Menu options that are not available will become grayed out. And keys that are not available will be disabled and the corresponding OSD icons will disappear.

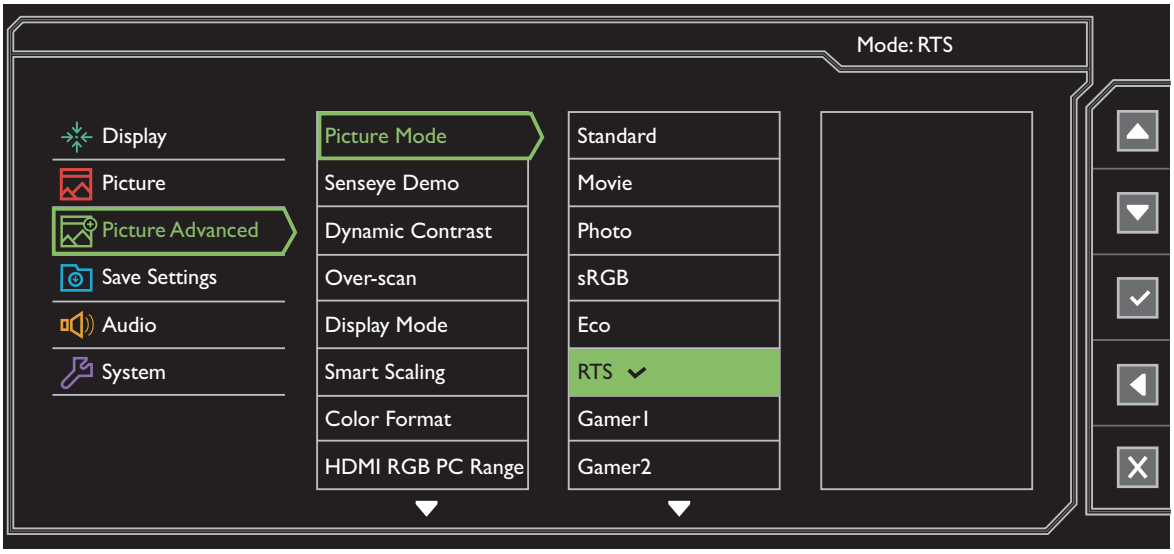

1. Select **Menu** from the hot key menu.
2. Use ▲ or ▼ to select **Picture Advanced**.
3. Select ▶ to go to a sub menu, and then use ▲ or ▼ to select a menu item.
4. Use ▲ or ▼ to make adjustments, or use ✓ to make selection.
5. To return to the previous menu, select ◀.
6. To exit the menu, select ✕.

Item	Function		Range
Picture Mode	Select a picture mode that best suits the type of images shown on the screen. The default setting is **RTS**. Change the setting if needed.		
	Standard	For basic PC application.	
	Movie	For viewing videos.	
	Photo	For viewing still images.	
	sRGB	For better color matching representation with the peripheral devices, such as printers, digital cameras, etc.	
	Eco	For saving electricity with low power consumption by providing minimum brightness for all running programs.	

Download from Www.Somanuals.com. All Manuals Search And Download.

Item	Function		Range
	RTS	For playing RTS (Real-time strategy) games.	
	Gamer1	Applies customized display settings.	
	Gamer2	For details on setting up a game mode, see Setting up your own game mode on page 29.	
	Gamer3		
Senseye Demo	Displays the preview of screen images under the selected mode from Picture Mode. The screen will be divided into two windows; the left window demonstrates images of Standard mode, while the right window presents the images under the specified mode.		• **ON** • **OFF**
Dynamic Contrast	The function is to automatically detect the distribution of an input visual signal, and then to create the optimal contrast.		0 to 5
Overscan	Slightly enlarges the input image. Use this feature to hide annoying edge noise if present around your image. Available only when the input source is HDMI or D-Sub (VGA converted from Component).		• **ON** • **OFF**
Display Mode	This feature is provided to allow aspect ratios other than 16:9 to be displayed without geometric distortion. The options under **Display Mode** will be different depending on the input signal sources. Depending on your selection of **Picture Mode**, different **Display Mode** option is pre-set. Change the setting if needed.		
	Full	Scales the input image to fill the screen. Ideal for 16:9 aspect images.	
	Aspect	The input image is displayed without geometric distortion filling as much of the display as possible.	
	1:1	Displays the input image in its native resolution without scaling.	
	17" (4:3)	Displays the input image as if on a 17" monitor of 4:3 aspect ratio.	
	19" (4:3)	Displays the input image as if on a 19" monitor of 4:3 aspect ratio.	
	19"W (16:10)	Displays the input image as if on a 19"W monitor of 16:10 aspect ratio.	
	21.5" (16:9)	Displays the input image as if on a 21.5" monitor of 16:9 aspect ratio.	

Download from Www.Somanuals.com. All Manuals Search And Download.

Item	Function		Range
	22"W (16:10)	Displays the input image as if on a 22"W monitor of 16:10 aspect ratio.	
	23"W (16:9)	Displays the input image as if on a 23"W monitor of 16:9 aspect ratio.	
Smart Scaling	Adjusts the display size to best suit your needs. If the **Display Mode** is **17"**, **19"W**, or **21.5"W**, the last 2 scaling settings (in different resolutions of the input source) will be saved for quick access. If the **Display Mode** is **1:1** (and the resolution of the input source is lower than 1920 x 1080), the last 5 scaling settings (in different resolutions of the input source) will be saved for quick access.		0 ~ 100
Color Format	Determines the color space (**RGB** or **YUV**) based on the detected video signal. You might need to manually set the **Color Format** if colors shown on the monitor screen do not display properly. If the input source is HDMI, color format is not selectable. In other words, **Color Format** is automatically set depending on the input video source.		
	RGB	• For D-Sub (VGA) input source from PC. • For DVI input source.	
	YUV	For D-Sub (Component converted from VGA) input source from a video device.	
HDMI RGB PC Range	Determines the range of color scales. Select an option that matches the RGB range setting on the connected HDMI device.		• **RGB** (0 ~ 255) • **RGB** (16 ~ 235)
Smart Focus	This feature provides a highlight area to focus on certain content, e.g. a YouTube video or an online game.		
	Size	Determines the size of the highlight area.	• **Small** • **Large** • **OFF**
	H. Position	Adjusts the horizontal position of the highlight area.	0 ~ 100
	V. Position	Adjusts the vertical position of the highlight area.	0 ~ 100
	Scaling	Scales the highlight area.	0 ~ 100

Download from Www.Somanuals.com. All Manuals Search And Download.

Save Settings menu

Available menu options may vary depending on the input sources, functions and settings. Menu options that are not available will become grayed out. And keys that are not available will be disabled and the corresponding OSD icons will disappear.

1. Select **Menu** from the hot key menu.
2. Use ▲ or ▼ to select **Save Settings**.
3. Select ▶ to go to a sub menu, and then use ▲ or ▼ to select a menu item.
4. Use ✓ to make selection.
5. To return to the previous menu, select ◀.
6. To exit the menu, select ✕.

Item	Function	Range
Gamer 1	Saves a new set of customized display settings.	-
Gamer 2	See Setting up your own game mode on page 29 for information on applying the game mode.	
Gamer 3		

Download from Www.Somanuals.com. All Manuals Search And Download.

Audio menu

Available menu options may vary depending on the input sources, functions and settings. Menu options that are not available will become grayed out. And keys that are not available will be disabled and the corresponding OSD icons will disappear.

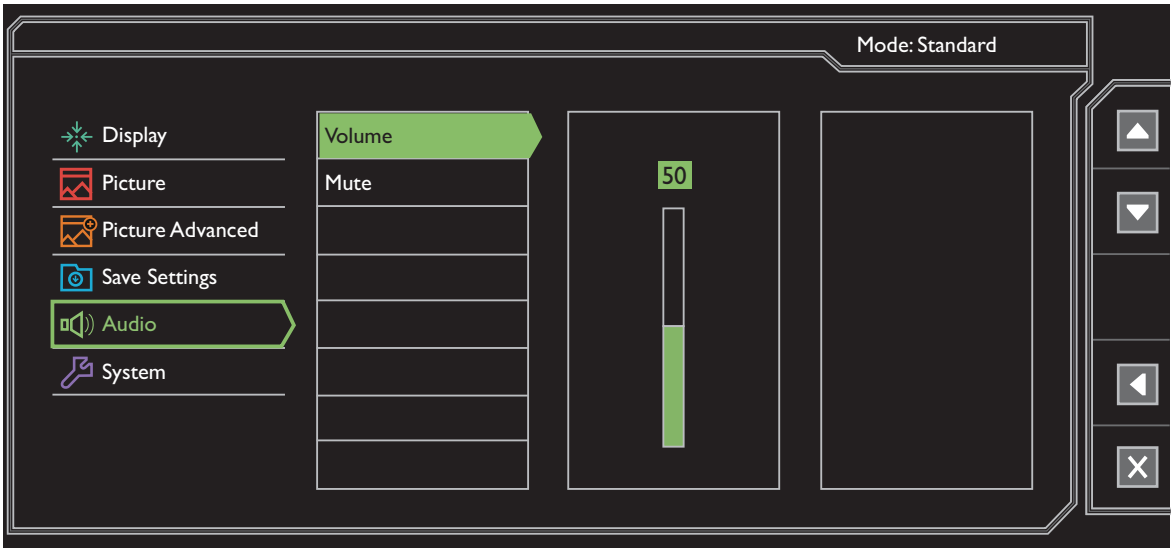

1. Select **Menu** from the hot key menu.
2. Use ▲ or ▼ to select **Audio**.
3. Select ▶ to go to a sub menu, and then use ▲ or ▼ to select a menu item.
4. Use ▲ or ▼ to make adjustments, or use ✓ to make selection.
5. To return to the previous menu, select ◀.
6. To exit the menu, select ✕.

Item	Function	Range
Volume	Adjusts the audio volume.	0 ~ 100
Mute	Mutes the audio input.	• **ON** • **OFF**

Download from Www.Somanuals.com. All Manuals Search And Download.

System menu

Available menu options may vary depending on the input sources, functions and settings. Menu options that are not available will become grayed out. And keys that are not available will be disabled and the corresponding OSD icons will disappear.

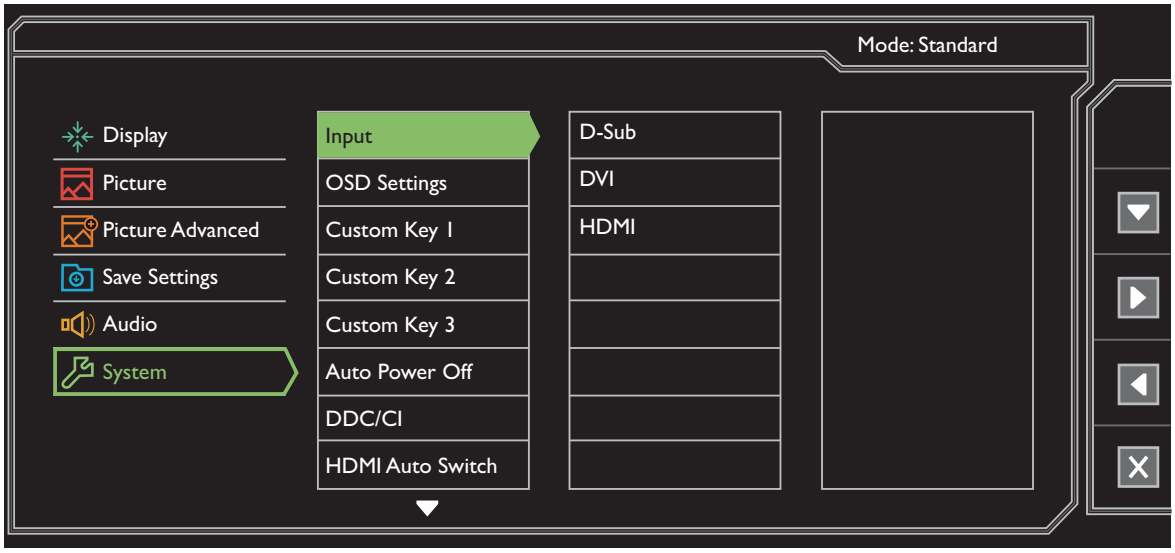

1. Select **Menu** from the hot key menu.
2. Use ▲ or ▼ to select **System**.
3. Select ▶ to go to a sub menu, and then use ▲ or ▼ to select a menu item.
4. Use ▲ or ▼ to make adjustments, or use ✓ to make selection.
5. To return to the previous menu, select ◀.
6. To exit the menu, select ✕.

Item	Function	Range
Input	Use this to change the input to that appropriate to your video cable connection type.	• **D-Sub** • **DVI** • **HDMI**

Download from Www.Somanuals.com. All Manuals Search And Download.

Item	Function		Range
OSD Settings	**Language**	Sets the OSD menu language. The language options displayed on your OSD may differ from those shown on the right, depending on the product supplied in your region.	• **English** • **Français** • **Deutsch** • **Italiano** • **Español** • **Polski** • **Česky** • **Magyar** • **Serbo-croatia** • **Română** • **Nederlands** • **Русский** • **Svenska** • **Português** • 日本語 • 繁體中文 • 简体中文
	Display Time	Adjusts the display time of the OSD menu.	• **5 Sec.** • **10 Sec.** • **15 Sec.** • **20 Sec.** • **25 Sec.** • **30 Sec.**
	OSD Lock	Prevents all the monitor settings from being accidentally changed. When this function is activated, the OSD controls and hotkey operations will be disabled. To unlock the OSD controls, press and hold any key for 10 seconds.	
Customer Key 1	Sets the function to be accessed by custom key 1.		• **Picture mode** • **Display Mode** • **Smart Scaling** • **Brightness** • **Contrast** • **Smart Focus** • **Volume** • **Mute** • **Input** • **Black eQualizer**
Customer Key 2	Sets the function to be accessed by custom key 2.		
Customer Key 3	Sets the function to be accessed by custom key 3.		

Download from Www.Somanuals.com. All Manuals Search And Download.

Item	Function	Range
Auto Power Off	Sets the time to power off the monitor automatically in power saving mode.	• **OFF** • **10min.** • **20min.** • **30min.**
DDC/CI	Allows the monitor settings to be set through the software on the PC. DDC/CI, short for Display Data Channel/Command Interface, which was developed by Video Electronics Standards Association (VESA). DDC/CI capability allows monitor controls to be sent via the software for remote diagnostics.	• **ON** • **OFF**
HDMI Auto Switch	When this function is activated, HDMI port will be in the input auto select loop. Otherwise, HDMI can only be selected by input select or by hot key.	• **ON** • **OFF**
Resolution Notice	Sets whether to display the resolution notice of the recommended resolution when a new input source is detected by the monitor.	• **ON** • **OFF**
Information	Displays the current monitor property settings.	• **Input** • **Current Resolution** • **Optimum Resolution** (best with the monitor) • **Model Name**
Reset All	Resets all mode, color and geometry settings to the factory default values.	• **YES** • **NO**

Download from Www.Somanuals.com. All Manuals Search And Download.

Troubleshooting

Frequently asked questions (FAQ)

The image has a faulty coloration.

- The default **Picture Mode** is **RTS**, which is designed for RTS games. If you prefer other picture modes, go to **Picture Advanced** and change setting in **Picture Mode**.
- If the image has a yellow, blue or pink appearance, go to **Picture** and **Reset Color**, and then choose **YES** to reset the color settings to the factory defaults.

If the image is still not correct and the OSD also has faulty coloration, this means one of the three primary colors is missing in the signal input. Now check the signal cable connectors. If any pin is bent or broken off, please contact your dealer to get necessary support.

The image is blurred.

Read the instructions on the link **"Adjusting the Screen Resolution"** on the CD, and then select the correct resolution, refresh rate and make adjustments based on these instructions.

How do you use a VGA extension cable?

Remove the extension cable for the test. Is the image now in focus? If not, optimize the image by working through the instructions in the **"Adjusting the refresh rate"** section on the link **"Adjusting the Screen Resolution"**. It is normal for blurring to occur due to conduction losses in extension cables. You can minimize these losses by using an extension cable with better conduction quality or with a built-in booster.

Does the blurring only occur at resolutions lower than the native (maximum) resolution?

Read the instructions on the link **"Adjusting the Screen Resolution"** on the CD. Select the native resolution.

Pixel errors can be seen.

One of several pixels is permanently black, one or more pixels are permanently white, one or more pixels are permanently red, green, blue or another color.

- Clean the LCD screen.
- Cycle power on-off.
- These are pixels that are permanently on or off and is a natural defect that occurs in LCD technology.

No image can be seen.

Is the prompt on the display illuminated in green?

If the LED is illuminated in green and there is a message **Out of Range** on the screen, this means you are using a display mode that this monitor does not support, please change the setting to one of the supported mode. Please read the **“Preset display modes”** section from the link **"Adjusting the Screen Resolution"**.

Download from Www.Somanuals.com. All Manuals Search And Download.

Faint shadow from the static image displayed is visible on the screen.

- Activate the power management function to let your computer and monitor go into a low power "sleep" mode when not actively in use.
- Use a screensaver to prevent the occurrence of image retention.

Is the prompt on the display illuminated in orange?

If the LED is illuminated in orange, the power management mode is active. Press any button on the computer keyboard or move the mouse. If that does not help, check the signal cable connectors. If any pin is bent or broken off, please contact your dealer to get necessary support.

Is the prompt on the display not illuminated at all?

Check the power supply mains socket, the external power supply and the mains switch.

The image is distorted, flashes or flickers.

Read the instructions on the link **"Adjusting the Screen Resolution"** on the CD, and then select the correct resolution, refresh rate and make adjustments based on these instructions.

You are running the monitor at its native resolution, but the image is still distorted.

Images from different input sources may appear distorted or stretched on the monitor running at its native resolution. To have the optimal display performance of each type of input sources, you can use the **Display Mode** function to set a proper aspect ratio for the input sources. See Display Mode on page 37 for details.

The image is displaced in one direction.

Read the instructions on the link **"Adjusting the Screen Resolution"** on the CD, and then select the correct resolution, refresh rate and make adjustments based on these instructions.

The OSD controls are inaccessible.

To unlock the OSD controls when it is preset to be locked, press and hold any key for 10 seconds.

No sound can be heard from the connected external speakers.

- Remove your headphone (if the headphone is connected to the monitor).
- Check whether the headphone jack is properly connected.
- If the external speakers are USB-powered, check whether the USB connection is OK.
- Increase the volume (volume may be muted or too low) on the external speakers.

Need more help?

If your problems remain after checking this manual, please contact your place of purchase or e-mail us at: Support@BenQ.com.

Download from Www.Somanuals.com. All Manuals Search And Download.

Free Manuals Download Website

http://myh66.com

http://usermanuals.us

http://www.somanuals.com

http://www.4manuals.cc

http://www.manual-lib.com

http://www.404manual.com

http://www.luxmanual.com

http://aubethermostatmanual.com

Golf course search by state

http://golfingnear.com

Email search by domain

http://emailbydomain.com

Auto manuals search

http://auto.somanuals.com

TV manuals search

http://tv.somanuals.com