American Standard

Style That Works Better

BARRIER FREE

ELLISSE PETITE™ COUNTERTOP SINK

VITREOUS CHINA

ELLISSE PETITE™ COUNTERTOP SINK

- Petite stylish countertop sink made from vitreous china
- Self-rimming with cutout template supplied
- Rear overflow
- Large deck area
  Shown with 8871.802 Amarilis faucet with Fabian handles (not included)

❏ **0411.039** Faucet holes on 8" (203mm) centers (illustrated)

❏ **0410.021** Faucet holes on 4" (102mm) centers

❏ **0411.047** Center hole only

Nominal Dimensions:
610 x 467mm
(24" x 18-3/8")

Bowl sizes:
457mm (18") wide
305mm (12") front to back
165mm (6-1/2") deep

Compliance Certifications - Meets or Exceeds the Following Specifications:
- ASME A112.19.2M for Vitreous China Fixtures

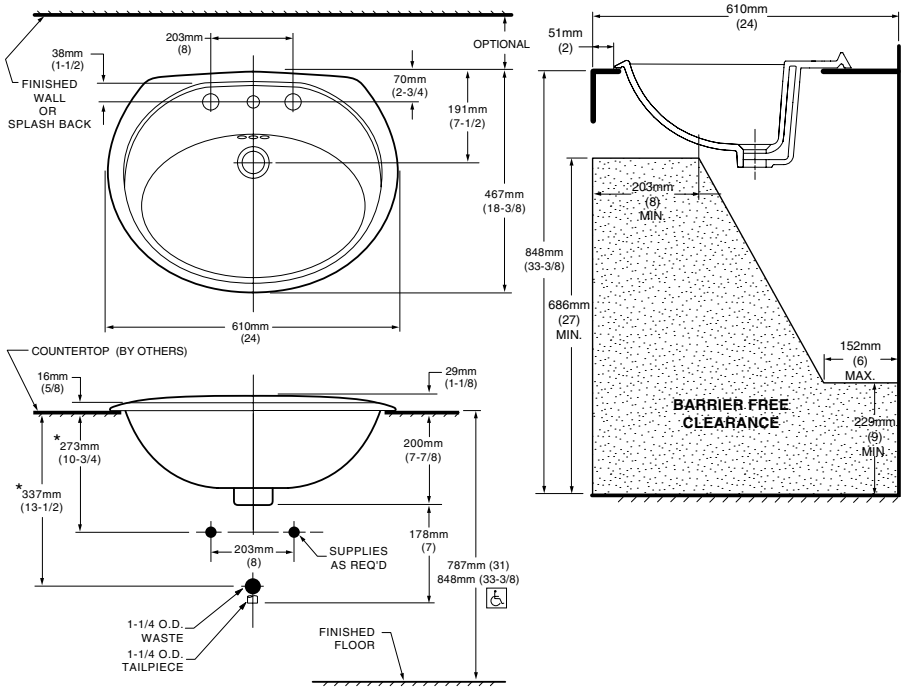

To Be Specified:
- ❏ Color: ❏ White ❏ Bone ❏ Linen ❏ Silver ❏ Fawn Beige ❏ Black
- ❏ Faucet*:
- ❏ Faucet Finish:
- ❏ Supplies:
- ❏ 1-1/4" Trap:

* See faucet section for additional models available

MEETS THE AMERICANS WITH DISABILITIES ACT GUIDELINES AND ANSI A117.1 ACCESSIBLE AND USABLE BUILDINGS AND FACILITIES - CHECK LOCAL CODES.
Install lavatory 864mm (34") from finished floor.
Lavatory installed 51mm (2") minimum from front edge of countertop provides 686mm (27") knee clearance area.

NOTES:
* DIMENSIONS SHOWN FOR LOCATION OF SUPPLIES AND "P" TRAP ARE SUGGESTED.
FOR COUNTERTOP CUTOUT AND INSTALLATION INSTRUCTIONS USE TEMPLATE SUPPLIED WITH SINK.
FITTINGS NOT INCLUDED WITH FIXTURE AND MUST BE ORDERED SEPARATELY.
SEALING COMPOUND SUPPLIED BY OTHERS.

IMPORTANT: Dimensions of fixtures are nominal and may vary within the range of tolerances established by ANSI Standard A112.19.2.
These measurements are subject to change or cancellation. No responsibility is assumed for use of superseded or voided pages.

© 2008 AS America Inc.

Revised 2/08

Download from Www.Somanuals.com. All Manuals Search And Download.

Free Manuals Download Website

http://myh66.com

http://usermanuals.us

http://www.somanuals.com

http://www.4manuals.cc

http://www.manual-lib.com

http://www.404manual.com

http://www.luxmanual.com

http://aubethermostatmanual.com

Golf course search by state

http://golfingnear.com

Email search by domain

http://emailbydomain.com

Auto manuals search

http://auto.somanuals.com

TV manuals search

http://tv.somanuals.com