6 3/4" Aperture Deep Insulated Ceiling Incandescent Frame-In Kit

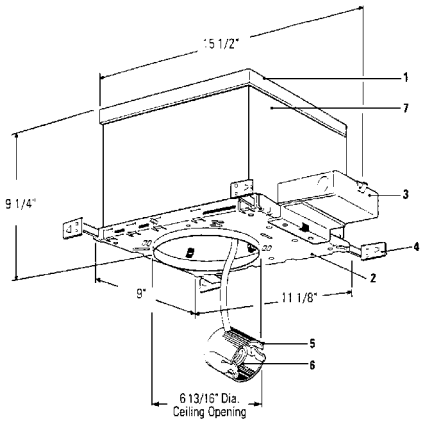

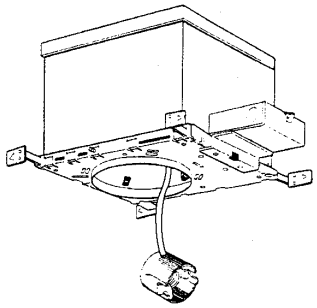

Frame-in Kit

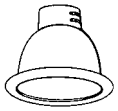

Reflector Trim

Complete Fixture consists of Reflector Trim & Frame-In Kit. Select each separately.

Frame-In Kit	**Reflector Trims — See Individual Reflector Trim Specification Sheets**									
	Open Downlight						Adjustable		Enclosed Diffuers	Wall Washer
	Reflector	Satin Cone	Sloped Ceiling	Baffles	Basic White	Cross Blade	Recessed Line Volt.	Recessed Low Volt.		
1100DICM	**1143** **1144** **1144CD** **1145** **1146** **1146CD** Cone: **1112†** **1113†** **1113BK†** **1113CD†** **1113WH**	**1108†** **1110†**	**1131** **1131WH** **1131GD** **1131CL** **1131BK** **1133** **1133WH** **1133GD** **1133CL** **1133BK**	**1105†** **1105WH** **1176** **1176WH** **1179M1** **1179WH** **1105BNM**	**1170M1** **1171**	**1132** **1132A**	**1127** **1127BK** **1127WH** **1129†** **1129CD†** **1129WH** **1129CL†** **1129BK†** **1129GD†** **1138** **1148** Eyeball: **1122** **1122WH** **1123** **1123WH** **1182**	**1152** **1155** **1155WH** **1161** **1161WH** **1163** **1164**	**1121** **1124** **1126** **1128** **1134** **1177SH** **1178SH** **1190**	**1135** **1135WH** **1185** **1186** **1186WH**

† Add NM to catalog number for Natural Metal Flange finish

Features

1. **Housing:** Walls .032" aluminum. Cover .026" galvanized steel. UL listed for direct contact with thermal insulation reduces heat loss. Access door for inspection of junction box.
2. **Mounting Frame:** .036" (#20 ga.) galvanized steel. Accommodates all ceilings up to 1" thick. 3/8" deep integral lip. Four slots are positioned 90° apart to simplify alignment. Push-in/twist-out rotoclips hold reflector flush to ceiling.
3. **Junction Box:** 2" X 4" X 4": .063" (#14 ga.) galvanized steel. UL listed for maximum of 6 No. 12 ga., 90° C through branch circuit conductors. Quick release "L" shaped cover for outside access to wiring. Access door inside of housing allows easy inspection of wiring without removal of housing. Integral cable clamps permit attachment of nonmetallic, Romex® without the need for additional connectors.
4. **Mounting Bars:** .059" (#16 ga.) galvanized steel. Bars pivot for easy attachment and wire-in below ceiling line. Bars extend to accommodate 16" to 24" O. C. joist spacing and feature integral nail for secure attachment to wood construction. Attaches to T-bar ceilings without the need of accessories.
5. **Socket Housing:** Galvanized steel.
6. **Socket:** Porcelain medium base; nickel plated screw shell. Pre-wired with #18 ga. SF1 leads to junction box.
7. **Thermal Protector:** Meets NEC and UL requirements. Located inside housing.

Options & Accessories

Extra-Thick Ceiling Mounting Ring: **1967A** - up to 2" thick ceiling.
277V Remote Step-Down Transformer: **7997** - 277v down to 120v 300W max. load.

Labels

UL (Suitable for Damp Locations).

Romex® is a registered trademark of General Cables Industries Inc.
US Patent Nos. 4,313,154; 5,045,985; 4,751,624

Job Information **Type:**

Job Name:

Cat. No.:

Lamp(s):

Notes:

Lightolier a Genlyte company www.lightolier.com
631 Airport Road, Fall River, MA 02720 • (508) 679-8131 • Fax (508) 674-4710
We reserve the right to change details of design, materials and finish.
© 2006 Genlyte Group LLC • F0906

Download from Www.Somanuals.com. All Manuals Search And Download.

LIGHTOLIER®

Free Manuals Download Website

http://myh66.com

http://usermanuals.us

http://www.somanuals.com

http://www.4manuals.cc

http://www.manual-lib.com

http://www.404manual.com

http://www.luxmanual.com

http://aubethermostatmanual.com

Golf course search by state

http://golfingnear.com

Email search by domain

http://emailbydomain.com

Auto manuals search

http://auto.somanuals.com

TV manuals search

http://tv.somanuals.com